12 November 2008

Trade in Intermediate Producer Services under Imperfect Competition

PRELIMINARY VERSION

Aidan Islyami [i]

University of Kiel

Abstract

In this paper a stylized CGE model is constructed to study the impact of liberalization of barriers for foreign providers of intermediate producer services under imperfect competition on the welfare, the downstream industry output, the prices of the factors of production and the pattern of trade. An attempt is made at incorporating oligopoly market structure into the services sector within general equilibrium model. Consequently, a model with firms making output conjectures about domestic and foreign rivals is adopted. The case of a small developing country with less efficient services sector relative to the foreign firms is assumed. In this framework, interaction and the relative significance of mechanisms resulting from the love of variety, anti and pro competitive and the efficiency effects on the outcomes of the services liberalization is analyzed. It is found that the liberalization services trade might be negative in terms of welfare and downstream industry expansion even if the profits of the foreign firms are not shifted abroad. This represents the evidence of dominant anticompetitive effect. It is therefore important to take into consideration the underlying market structure while liberalizing services trade.

Keywords: Trade in services, CGE modeling, Imperfect competition.

JEL classification: F12; F23; C68

[i] Department of Economics, Christian-Albrechts-Universiät zu Kiel. Laurispark, Neufeldtstr. 10, Bau 35, 24118 Kiel; e-mail: islyami@economics.uni-kiel.de

1. Introduction

There are many studies that emphasize the potential global gains from services trade liberalization. Those gains are expected to be higher than the gains from goods trade (Hoekman, 2006). In particular, services trade is expected to bring significant benefits to developing countries where barriers are the highest. The outcomes could be the improvements in the household welfare (Rutherford et al, 2006), the long run growth performance (Mattoo et al, 2006) and the domestic industry productivity (Markusen et al, 2005). On the other hand, numerous quantitative models show that the effects are uneven and some countries may lose due to various reasons: rents accruing to the foreign investors, terms of trade deterioration, etc.

It is also observed that the gains of FDI flows which are effectively the liberalization in terms of GATS (General Agreement on Trade in Services) Mode 3 commercial presence and ownership restrictions are large and more variable compared to the gains coming from the cross border trade. The types of services under consideration are typically producer services such as business, transportation, telecommunications, etc that are used as an intermediate inputs and barriers are presented in the form of advalorem tariff restrictions.

Markusen et al. (2005) use a model with monopolistic competition to show that foreign producer services could provide substantial benefits to domestic firms. In particular, the domestic downstream industry purchases higher quality business services and expands as more foreign firms enter the domestic market. The optimal tariff is found to be a subsidy. However, particularly in developing countries many backbone services such as telecommunications, finance and insurance are characterized by oligopoly markets. Hoekman (2006), Mattoo and Sauve (2003) and others stress the importance of market structure and regulation for the outcomes of services trade liberalization. Furthermore, even though there are many trade models that incorporate market power, there are few that address special issues related to services (Copeland, 2002).

In addition to the lack of strategic interaction, the Dixit-Stiglitz type models of monopolistic competition are also criticized for failing to capture an empirical observation that trade may reduce rather than increase variety. In the model constructed in this paper, albeit there is a love-of-variety effect, the number of varieties could in fact fall when relatively more effective foreign firms increase their share in the domestic market as a result of trade liberalization. This is because foreign firms are subject to higher fixed costs compared to the domestic firms

and will consequently tend to form more concentrated market structure. In addition to discriminatory national treatment limitations like specific licensing, foreign firms could naturally be expected to have higher fixed costs than domestic firms due to adaptation costs to operate in the new business environment, language barriers, etc. It is also plausible to assume that foreign firms are more efficient compared to the local firms in the developing countries.

In such a scenario, if the anticompetitive effect dominates the positive efficiency effect, the price of the producer services may not go down and the production in the downstream industry may not expand. The impact on the welfare would depend on those effects as well and could among other things be negative even when all the profits of the foreign firms accrue to the domestic representative agent. It will therefore be useful to examine the optimal taxation of the foreign service providers. The rather trivial result describing positive welfare effect of trade and investment liberalization obtained from monopolistic competition models of trade may not hold in this case. On the other hand, services trade liberalization is expected to bring higher gains in the oligopoly models compared to the monopolistic competition models due to the pro-competitive effect.

The purpose of this paper is therefore to investigate the relative importance and interactions between the above mentioned causal mechanisms in the framework of the stylized quantitative model. I build upon the approach in Markusen et al. (2005) and construct an oligopoly model with conjectural output variations in producer services. The model is succinct and specifically designed to address the given problem.

The paper is structured as follows: Section 2 presents a detailed formulation of the model. The impacts of some of the parameters of the model on the markup are presented in section 3. The section 4 describes the considerations of the data and the calibration strategy used to obtain benchmark replication of the model. The section 5 represents CGE (Computable General Equilibrium) model specifications and the numerical results of the policy experiments and section 6 concludes. The derivation of the markup equation is given in the appendix.

2. Modeling framework

I assume that there are two sectors in the economy: Y denotes sector with market power and Z perfectly competitive sector, which represents all the other sectors of the economy.

$$Y = (VA^{\frac{\gamma-1}{\gamma}} + PS^{\frac{\gamma-1}{\gamma}})^{\frac{\gamma}{\gamma-1}} \qquad (1)$$

Here PS denotes producer services and VA value added. Analogous to Konan and Assche (2007) the producer services are modeled so that they affect positively the value added productivity when used as an intermediate good. γ is a corresponding elasticity of substitution. The producer services in turn constitute an Armington type CES (constant elasticity of substitution) function of domestic and foreign services. While there are no barriers to trade in goods, trade in services is subject to tariffs and could only be provided through commercial presence.

$$PS = (\delta * XD^{\frac{\sigma-1}{\sigma}} + (1-\delta) * XF^{\frac{\sigma-1}{\sigma}})^{\frac{\sigma}{\sigma-1}} \qquad (2)$$

The domestic XD and foreign XF services are CES aggregates of several varieties. Each firm produces only one good (variety) and competes in quantities with both domestic and foreign firms.

$$XD = (\sum_{i=1}^{n_d} xd_i^{\frac{\sigma_d-1}{\sigma_d}})^{\frac{\sigma_d}{\sigma_d-1}} \qquad (3)$$

$$XF = (\sum_{j=1}^{n_f} xf_j^{\frac{\sigma_f-1}{\sigma_f}})^{\frac{\sigma_f}{\sigma_f-1}} \qquad (4)$$

The dual price indexes would then be:

$$PD = (\sum_{i=1}^{n_d} pd_i^{(1-\sigma_d)})^{\frac{1}{1-\sigma_d}} \qquad (3')$$

$$PF = (\sum_{j=1}^{n_f} pf_j^{1-\sigma_f})^{\frac{1}{1-\sigma_f}} \qquad (4')$$

Here n_d , n_f are the number of domestic and foreign firms correspondingly. The production of each variety is subject to scale economies due to the fixed costs and uses domestic primary factors of production: S denotes skilled labor and L denotes all the other factors of production. The factors of production are supplied inelastically. The production structure of Y sector is presented in Appendix A.

Consumers demand only final products $U = Z^{\alpha} * Y^{1-\alpha}$ (5)

The markup charged by producer services firms will depend on the substitution elasticities at different stages of production and the output conjectures of the rival firms. In Appendix B, the perceived price elasticity of demand is derived under the assumption that the domestic firms make the same conjectures about the behavior of the foreign firms and there is symmetry in-between the domestic firms as follows:

$$\frac{1}{\varepsilon_i^d} = \left[\frac{1}{\gamma} - \frac{1}{\sigma} + SH_{PS}\left(\frac{1}{\Omega} - \frac{1}{\gamma}\right)\right]\left(v_i^d + (1-v_i^d)S_i^d\right) + \left(\frac{1}{\sigma} - \frac{1}{\sigma_d}\right)\left(v_i^d + (1-v_i^d)/n_d\right) +$$
$$+\frac{1}{\sigma_d}\left(\frac{(v_i^d)^2+1}{1+v_i^d(n_d-1)}\right) \qquad (6)$$

Here $v_i^d = \frac{d\ln(xd_k)}{d\ln(xd_i)}$ is the conjectural elasticity of firm output, $S_i^d = s_d / n_d$ is the share of the domestic firm in the total producer services industry and $\Omega = -\frac{d\ln(Y)}{d\ln(P)}$ is the price elasticity of demand in the downstream industry.

Then, the markup is obtained from the Lerner formula

$$MR_i^d = \frac{\partial(pd_i * xd_i)}{\partial xd_i} = pd_i + \frac{\partial pd_i}{\partial xd_i} * xd_i = pd_i \left(1 + \frac{1}{\frac{\partial xd_i}{\partial pd_i} * \frac{pd_i}{xd_i}} \right) =$$

$$= pd_i * \left(1 - \frac{1}{\varepsilon_i^d} \right) = MC_i^d \quad (7)$$

The markup equation for the foreign firms is calculated by analogy. The Cournot competition will be a particular case of this setting with $v_i^d = 0$ and $v_i^f = 0$. Another specification would be a cartel with $v_i^d = n_d$ and $v_i^f = n_f$.

Since there is no unambiguous analytical solution for the model, it is solved quantitatively.

3. Partial derivatives of the markup

Evaluating partial derivatives of the markup equation with respect to parameters could already give us some insights about the economic reasoning engraved into the model behavior. In particular, the partial derivatives with respect to the price elasticity of demand in the downstream industry Ω and the elasticity of substitution between producer services and value added γ are negative under a reasonable condition of $v_i^d > \frac{s_d}{s_d - n_d}$ [i]

$$\frac{\partial(1/\varepsilon_i^d)}{\partial\Omega} = -\left(\frac{SH_{PS}}{\Omega^2} \right) \left(v_i^d + (1 - v_i^d) S_i^d \right) < 0 \quad (8)$$

The higher price elasticity of demand in the downstream industry will translate into a higher responsiveness of the latter to the changes in the input prices and consequently less market power in the domestic producer services.

$$\frac{\partial(1/\varepsilon_i^d)}{\partial\gamma} = -\left(\frac{1 - SH_{PS}}{\gamma^2} \right) \left(v_i^d + (1 - v_i^d) S_i^d \right) < 0 \quad (9)$$

[i] Even if $v_i = 0$ the left hand side should be negative in most of the cases so that inequality holds.

The market power of the producer services will decline as the downstream industry gets more flexible in substituting between its primary factors and services inputs.

The sign of the partial derivative with respect to the Armington type elasticity will depend on the value of conjectural elasticity of firm output

$$\frac{\partial(1/\varepsilon_i^d)}{\partial\sigma}=\left(\frac{1}{\sigma^2}\right)\left((s_d-1)(1-v_i^d)/n_d\right)=\begin{cases}\leq 0 & if \quad v_i^d<1\\ \geq 0 & if \quad v_i^d>1\end{cases} \qquad (10)$$

In this case, under relatively more collusive conjectures of producer services firms about their rivals' output $v_i^d>1$ higher elasticity of substitution between domestic and foreign services sectors will lead to a higher markup of the domestic firms. On the other hand, if service producers are relatively more competitive in quantities $v_i^d<1$, higher Armington type elasticity will lead to a lower markup.

The similar pattern could be observed for the partial derivative with respect to the elasticity of substitution between different varieties

$$\frac{\partial(1/\varepsilon_i^d)}{\partial\sigma_d}=\frac{v_i^2(n_d^2-3n_d+1)+(2v_i-1)*(n_d-1)}{(1+v_i(n_d-1))*n_d} \qquad (11)$$

For $n_d>2.618$, the relatively collusive conjectures threshold will be less than 0.5. In other words, $v_i>\frac{1}{2}$ is sufficient for $\frac{\partial(1/\varepsilon_i^d)}{\partial\sigma_d}>0$ and under the Cournot competition $(v_i=0)$ we have $\frac{\partial(1/\varepsilon_i^d)}{\partial\sigma_d}<0$;

The conditions $\left[\frac{1}{\gamma}-\frac{1}{\sigma}+SH_{PS}\left(\frac{1}{\Omega}-\frac{1}{\gamma}\right)\right]\geq 0$, $\sigma_d\geq\sigma\geq\gamma$ and $n_d>1$ are sufficient for the following plausible properties to hold: $\frac{\partial(1/\varepsilon_i^d)}{\partial s_d}\geq 0$, $\frac{\partial(1/\varepsilon_i^d)}{\partial n_d}<0$ and $\frac{\partial(1/\varepsilon_i^d)}{\partial v_i}>0$

Namely that the markup of the domestic firms increases with the domestic share and more collusive conjectures about the behavior of the other firms and drops in the number of domestic firms.

4. The data in the benchmark and model calibration

The data was structured so that parameters fall into the reasonable ranges based on the empirical estimates and also reflect the assumptions made with respect to the structure of the model. In particular, I assume that the sector which uses intermediate producer services is more skilled labor intensive than the perfectly competitive sector and that the foreign producer services are less skilled labor intensive compared to the domestic services. In addition I assume that foreign firms are more efficient relative to the domestic firms. There are few if no empirical studies of comparative efficiency between domestic and foreign service providers in the developing countries (Whalley, 2004). The final goods are traded so that the good from the sector with imperfect competition is imported and the good from the perfectly competitive sector is exported in the benchmark scenario. Since there is no consistent information on the cost structure, the fixed cost ratio is obtained residually from the markup estimates.

There are several ways in which a CGE model with imperfect competition could be calibrated. I extraneously set the number of firms and the benchmark level of the markups and calibrate the bottom level elasticity of substitution σ_d, σ_f residually (Gasiorek et. al (1992), Haaland and Norman (1992), Willenbockel (1994, 2004)). The average price to marginal cost ratios is estimated to be 1.56 for the Euro area and 1.38 for the US. It is predicted to be even higher under increasing returns to scale (Christopoulou Vermeulen, 2008). I use the value of 1.6 for the price to marginal cost ratio which is then easily transformed into the markup value. The model is calibrated so that many variables are equal to one in the benchmark. There are no relevant estimates for the substitution elasticities used in the model. However, it is rational to expect that elasticities of substitution between services are less than the ones between the goods. The number of firms is taken arbitrarily to be 10 for both domestic and foreign sectors. I also observe the values of calibrated elasticities to be insignificantly responsive to the changes in the number of firms. The model uses GAMS/MPSGE syntax to obtain numerical solutions of the given CGE model.

5. The CGE model and the results of the numerical experiments

In the base scenario, I assume Cournot competition and increasing substitution elasticities from the top level to the bottom in the production structure of the model: $\sigma_d \geq \sigma \geq \gamma$. The

adopted modeling approach assumes economies of scale at the firm level based on the fixed costs. The domestic and foreign firms are modeled as representative agents that receive markup revenues and pay fixed costs. In other words, a zero profit condition at, for example, the domestic variety level will look as follows: $PD * n_d^{\frac{1}{\sigma_d - 1}} * (1 - markup) = MC$ (12). This is because the price per variety pd_i, is determined as $pd_i = PD * n_d^{\frac{1}{\sigma_d - 1}} \quad \forall i$. Hence, the price at the industry level is increasing in the elasticity of substitution between varieties and decreasing in the number of firms. The total cost for the domestic industry, under zero profit condition, could then be written as: $TC = MC * n_d^{\frac{1}{1-\sigma_d}} * XD + PD * XD * markup$ (13)[i]

I assume fixed costs in quantities at the variety level (FC) and the second term on the left hand side of (13) represents the total markup revenue of the firms in the domestic industry. The latter is also the fixed cost in values at the industry level: $PD * XD * markup = FC_d * P_{FC_d} * n_d$. It will not be quite fixed as it changes in terms of the price of the fixed cost (P_{FC_d}) and the number of firms.

A corresponding market clearing condition at an industry level would be:

$$XD = \frac{\partial C(PD, PF)}{\partial PD} * Q_{PS} \quad (14)$$

The left hand side represents a demand for the domestic industry good by the Shepard's lemma and the right hand side is the quantity supplied. At the variety level the condition is:

$$xd = n_d^{\frac{\sigma}{1-\sigma}} XD \quad (15)$$

If I plug XD from (14) into (15) and notice that $(xd)^s = \frac{XD}{n_d}$, I could get the condition used in the code: $XD * n^{\frac{1}{\sigma_d - 1}} = \frac{\partial C(PD, PF)}{\partial PD} * Q_{PS}$ (16)

In this way, analogous to Markusen (2002), Markusen et al. (2005), the symmetry between varieties enables one to express the whole system at the industry level only.

A higher elasticity of substitution between varieties (σ_d) would, ceteris paribus, mean higher cost for the firm. This is explained by the love of variety effect: consumers value more variety and higher substitution will decrease the love of variety effect which in turns implies a higher cost if the same number of varieties is kept.

[i] The economies of scope could also be incorporated into the setting by adding a fixed cost at an industry level

The number of firms is determined endogenously. In the base scenario, I assume that the share of the domestic industry is equal to the share of the foreign industry. The foreign firms are subject to two types of the discriminatory barriers: per unit of output tax and lump sum tax. The counterfactual experiments represent the free trade case when both taxes are lifted and the cases without only output or lump sum taxes. Table.1 reports the results of the counterfactual policy experiments in percentages. Table 2 in the Appendix B reports values in levels.

Table 1: Results of services trade liberalization in percentages

	Percentage change from the benchmark		
Variables	**No output tax**	**No lump sum tax**	**Free trade**
Welfare	**-1%**	**-1%**	**-2%**
Perfectly competitive sector (Z)	**8%**	**9%**	**14%**
Downstream industry (Y)	**-43%**	**-48%**	**-68%**
Producer services (PS)	**-43%**	**-48%**	**-69%**
Domestic services (XD)	**-52%**	**-58%**	**-80%**
Foreign services (XF)	**-14%**	**-17%**	**-28%**
Payments to the other factors of production	**2%**	**2%**	**3%**
Payments to skilled labor	**-4%**	**-5%**	**-7%**
Net exports of Z	**100%**	**112%**	**163%**
Net imports of Y	**109%**	**123%**	**174%**
Markup of domestic service providers	**7%**	**9%**	**18%**
Markup of foreign service providers	**6%**	**7%**	**15%**
Price index for welfare	**0%**	**0%**	**0%**
Price of the Z good	**0%**	**0%**	**0%**
Price of the downstream industry (PY)	**0%**	**0%**	**0%**
Price of services sector composite (PPS)	**2%**	**2%**	**3%**
Price of the domestic services (PXD)	**23%**	**28%**	**61%**
Price of the foreign services (PXF)	**-13%**	**-15%**	**-24%**
Number of domestic firms	**-35%**	**-40%**	**-61%**
Number of foreign firms	**-18%**	**-21%**	**-35%**
Share of the domestic sector	**-15%**	**-17%**	**-31%**
Share of the foreign sector	**15%**	**17%**	**31%**
Output per domestic firm	**-26%**	**-30%**	**-50%**
Output per foreign firm	**5%**	**6%**	**9%**

The welfare, measured as Hicksian welfare index, will fall as a result of services trade liberalization. In particular, free trade brings 2% decrease in the welfare. It is also accompanied by the higher prices of both goods and the contraction of the downstream industry. The latter, in turn, stems from the equivalent contraction in the producer services and the higher price of the services composite. The anticompetitive effect dominates in both domestic and foreign services sectors. In this setting, an increase of either output or lump sum tax within a reasonable range would be welfare improving.

In the *domestic* sector the market share falls and the number of firms and the output per firm decline. The market concentration is stronger and it is evident from the increased price and the markup over the marginal cost than in the benchmark.

In the *foreign* services sector, after taxes are lifted, more efficient foreign firms get a higher share in the industry and they are able to charge a lower price than the local firms and the output per firm increases. This implies a pro-competitive effect. Alternatively, the overall market concentration is also pressed to increase since foreign firms are subject to the relatively higher fixed costs. The anticompetitive effect seems to dominate; indeed, this is evident from the increase in the markup charged by the foreign firms and the rise in the number of foreign firms. Moreover, the rise in the output per firm in the foreign industry is much smaller than the fall in the domestic industry. Similarly, the price charged by the foreign services providers is, on one hand, influenced to move upwards by the higher market concentration and on the other hand it is expected to fall after taxes are lifted. As a result of those counteracting effects, prices charged by the foreign firms fall but by a smaller amount relative to the price upsurge by in the domestic industry.

The perfectly competitive sector (Z) expands and the payments to the factors used intensively in the production of the good produced by this sector increase. The payments to the skilled labor which is used relatively more intensively by downstream industry and by producer services fall after taxes on the foreign providers are lifted. This result is robust to the previously made assumption that local firms are more skilled labor intensive than the foreign firms. In the case where foreign firms are more skilled labor intensive than the local firms the price of the domestic services increase more and foreign services price decrease more than in the initial case. It does not bring much improvement against the negative anticompetitive effect with all the other changes being approximately the same Appendix C (Table 3, scenario1).

The external sector is not comprehensively modeled and the direction of trade change is consistent with the change in the production by the corresponding sector. Even if the country is a net exporter of the skilled labor intensive goods of the downstream industry, the results remain similar Appendix C (Table 3, scenario2). Another potentially important variable is the share of the domestic firms in the total industry. In Appendix C (Table 4, scenario3), I increase the share of the domestic sector. Thus, the share of the foreign firms is smaller in the

benchmark and the calibrated value of the elasticity of substitution between domestic varieties increases. In this case domestic firms have higher economies of diversification than the foreign firms; nonetheless, welfare improvements are insignificant.

It is also important to look at the sensitivity of the obtained results to the change in the fixed costs. In Appendix C (Table 4, scenario4) I present the results of the smaller market concentration in the foreign services sector as reflected by the lower level of the fixed costs relative to the domestic industry. The negative welfare effect coming from the contraction of the downstream industry reverses. The downstream industry expands significantly and both domestic and foreign industries expand. The trade in goods reverses and the home country starts exporting skill intensive good. As a result of that a payment to the skilled labor increase and the payment to the other factors of production falls. This effect is partially explained by the pro competitive effect. It is more plausible to assume that foreign firms are more efficient than domestic firms in terms of comparably lower variable rather than fixed costs. However, this experiment effectively stresses the importance of the anticompetitive effect as an explanation of the negative contraction in the downstream industry and welfare.

6. Concluding remarks

The framework constructed in this paper demonstrates interesting relationships between the key variables in the model of trade liberalization under imperfect competition. It appears that anticompetitive effect may dominate the system in such a way that more protectionism rather than openness is welfare improving. However, this result should be accepted with due caution because of the stylized nature of the underlying model. In other words, it is rather narrowly focused and emphasizes particular mechanisms only. On the other hand, a stylized quantitative model could serve as a useful tool to disentangle various effects present in the more complicated applied models. Those latter models are frequently viewed as black boxes because it could be difficult to explain which mechanisms and effects are responsible for the results (Devarajan, Robinson, 2005). Both applied and stylized models could be combined to be used effectively in the policy analysis.

The improvements in the data on services could significantly enhance the power of the analysis. In the model setting presented in the paper, individual firm efficiency and fixed cost share depend positively on each other. The differences in the cost share between foreign and

domestic firms appear to be critical for the anticompetitive effect obtained from the policy experiments in the numerical model. On the other hand, there is a lack of data on the comparative efficiency of foreign versus domestic firms in services.

Bibliography

Christopoulou Vermeulen (2008) *"Markups in the euro area and the US over the period 1981-2004 - a comparison of 50 sectors*," Working Paper Series 856, European Central Bank.

Copeland, B (2002) *"Benefits and costs of trade and investment liberalization in services: Implications from trade theory"* in Curtis, J. M. and D. C. Ciuriak, eds. Trade Policy Research 2002. Department of Foreign Affairs and International Trade, Canada 2002.

Devarajan.S, Robinson.S (2005) "*The Influence of Computable General Equilibrium Model on Policy*" in Kehoe. T, Srinivasan, T. N. and Whalley, John (eds) (2005) *Frontiers in Applied General Equilibrium Modelling*. Cambridge: Cambridge University Press, pp. 402-428.

Gasiorek, M., Smith, A., Venables, A.J, (2002) "*The accession of the UK to the EC: a welfare analysis"*. J. Common Mark. Stud. 40, 425–447.

Haaland, J.I., Norman, V.D, (1992) "*Global production effects of European integration. In: Winters, L.A. (Ed.*)", Trade Flows and Trade Policy after 1992, Cambridge University Press, Cambridge, pp. 67-91.

Konan. D.E and A.V Assche, (2007). *Regulation, Market Structure and Service Trade Liberalization*, Economic Modeling 24 (2007) 895-923.

Markusen, J. 1989. "*Trade in Producer Services and in Other Specialized Intermediate Inputs*" American Economic Review, 79, 85-95.

Markusen, J. (2002). "*General Equilibrium Modeling using GAMS and MPS/GE*". Boulder. www.gams.de/b/courses/dublin/tutorial.pdf.

Markusen Rutherford and Tarr (2005), "*Trade and direct investment in producer services and the domestic market for expertise"*, Canadian Journal of Economics 38 (2005), pp. 758–777.

Mattoo, A., R. Rathindran, and A. Subramanian (2006). *"Measuring Services Trade liberalization and its Impacts on Economic Growth: An Illustration*", Journal of Economic Integration 21 (2006), pp. 64-98.

Mattoo A., Sauve P., (2003). *Domestic Regulation and Services Trade Liberalization*. Oxford University Press: Washington, D.C.

Rutherford, T, D Tarr and O. Shepotylo (2006) "*The Impact of WTO Accession and the DDA: The Importance of Liberalization of Barriers Against FDI in Services for Growth and Poverty Reduction,"* in Thomas Hertel and L. Alan Winters (eds.), *Poverty and the WTO* (Palgrave and World Bank), pp.467-96.

de Santis, R.A. (2002) *"A computable general equilibrium model for open economies with imperfect competition and product differentiation"*. J. Econ. Integration 17, 311– 338.

Whalley, J. (2004) *"Assessing the Benefits to Developing Countries of Liberalization in Services Trade," The World Economy* 27(8), 1223-53.

Willenbockel, D., (1994) *"Applied General Equilibrium Modelling: Imperfect Competition and European Integration"* John Wiley, Chichester.

Willenbockel.D., (2004), *Specification Choice and Robustness in CGE Trade Policy Analysis with Imperfect Competition*, Economic Modeling 21 (2004) 1065-99

Appendix A: The production structure of the sector with imperfect competition

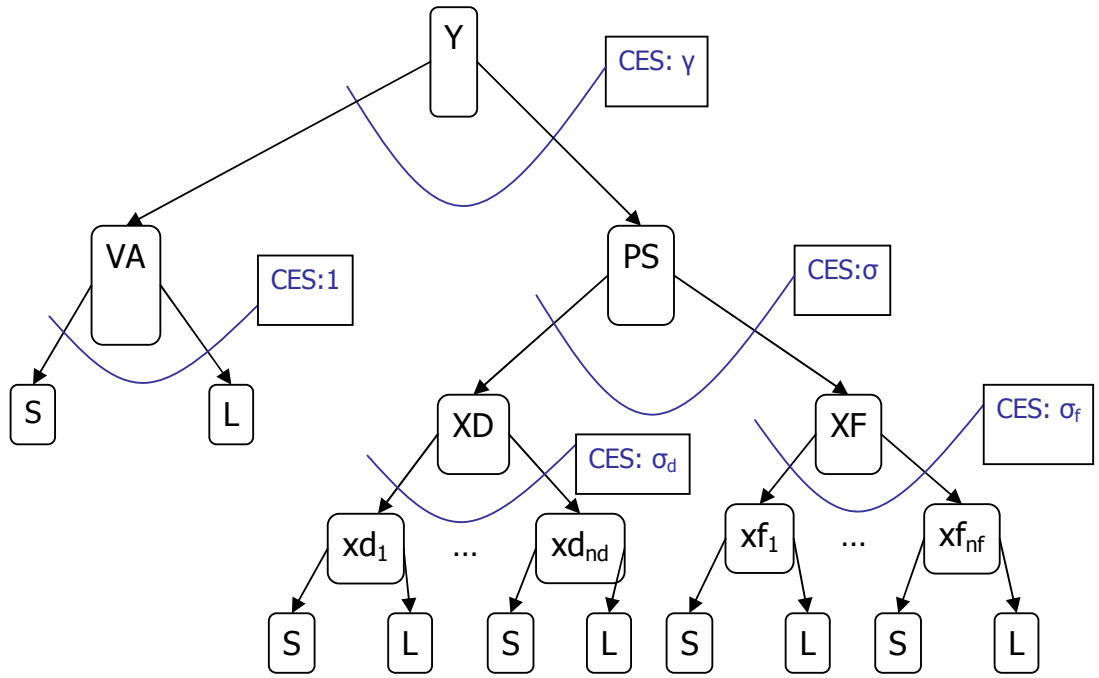

Appendix B: Derivation of the markup equation

Since the downstream industry is assumed to be perfectly competitive, we have:

$$pd_i = P_y * \frac{\partial Y}{\partial xd_i} = P_y * \frac{\partial Y}{\partial PS} * \frac{\partial PS}{\partial XD} * \frac{\partial XD}{xd_i} \quad (1A)$$

The partial derivatives obtained from the above decomposition could be easily calculated:

$$\frac{\partial Y}{\partial PS} = \left(\frac{Y}{PS}\right)^{\frac{1}{\gamma}} \quad (2A) \qquad \frac{\partial PS}{\partial XD} = \delta\left(\frac{PS}{XD}\right)^{\frac{1}{\sigma}} \quad (3A)$$

$$\frac{\partial XD}{\partial xd_i} = XD^{\frac{1}{\sigma_d}}\left[\sum_{k=1}^{n_d}\left(xd_k\right)^{-\left(\frac{1}{\sigma_d}\right)} * \frac{\partial xd_k}{\partial xd_i}\right] \quad (4A)$$

Here λ_i measures the conjectural output reactions of rival domestic and foreign firms: $\lambda_i = \frac{\partial xd_j}{\partial xd_i}$

Plug (2A), (3A), (4A) into (1A) to get:

$$pd_i = \delta * P_y * \left(\frac{Y}{PS}\right)^{\frac{1}{\gamma}} * \left(\frac{PS}{XD}\right)^{\frac{1}{\sigma}} * XD^{\frac{1}{\sigma_d}}\left[\sum_{k\neq i}\left(xd_k\right)^{-\left(\frac{1}{\sigma_d}\right)} * \lambda_i + \left(xd_i\right)^{-\left(\frac{1}{\sigma_d}\right)}\right] \quad (5A)$$

In order to rewrite (5A) in terms of the relative changes, I adopt the so called hat notation that is routinely used in the trade textbooks: $\hat{Y} = \frac{dY}{Y} = d\log(Y)$. For example in that case, $-\frac{\hat{Y}}{\hat{P}_y}$ is the price elasticity of demand in Y sector.

After imposing the needed transformations on (5A):

$$\hat{pd}_i = \hat{P}_y + \frac{1}{\gamma}\left(\hat{Y} - \hat{PS}\right) + \frac{1}{\sigma}\left(\hat{PS} - \hat{XD}\right) + \frac{1}{\sigma_d}\hat{XD} -$$

$$-\frac{1}{\sigma_d}\left[\sum_{k\neq i}\frac{\left(xd_k\right)^{-\left(\frac{1}{\sigma_d}\right)}}{\sum_{j\neq i}\left(xd_j\right)^{-\left(\frac{1}{\sigma_d}\right)} * \lambda_i + \left(xd_i\right)^{-\left(\frac{1}{\sigma_d}\right)}}\lambda_i * \hat{xd}_k + \frac{\left(xd_i\right)^{-\left(\frac{1}{\sigma_d}\right)}}{\sum_{j\neq i}\left(xd_j\right)^{-\left(\frac{1}{\sigma_d}\right)} * \lambda_i + \left(xd_i\right)^{-\left(\frac{1}{\sigma_d}\right)}}\hat{xd}_i\right] \qquad (6A)$$

Here I denote $sh_k = \frac{\left(xd_k\right)^{-\left(\frac{1}{\sigma_d}\right)}}{\sum_j\left(xd_j\right)^{-\left(\frac{1}{\sigma_d}\right)}}$ as a share of the firm in the whole domestic industry and $shl_k = \frac{\left(xd_k\right)^{-\left(\frac{1}{\sigma_d}\right)}}{\sum_{j\neq i}\left(xd_j\right)^{-\left(\frac{1}{\sigma_d}\right)} * \lambda_i + \left(xd_i\right)^{-\left(\frac{1}{\sigma_d}\right)}}$. In that case, $sh_k = shl_k$ for $\lambda_i = 1$;

If we divide (6A) by $\hat{xd}_i$, we get the inverse of the perceived elasticity of demand $\frac{1}{\varepsilon_i}$:

$$\frac{1}{\varepsilon_i} = -\frac{\hat{pd}_i}{\hat{xd}_i} = \left(\frac{1}{\Omega} - \frac{1}{\gamma}\right)\frac{\hat{Y}}{\hat{xd}_i} + \left(\frac{1}{\gamma} - \frac{1}{\sigma}\right)\frac{\hat{PS}}{\hat{xd}_i} + \left(\frac{1}{\sigma} - \frac{1}{\sigma_d}\right)\frac{\hat{XD}}{\hat{xd}_i} +$$

$$+\frac{1}{\sigma_d}\left[\sum_{k\neq i} v_i\lambda_i shl_k + shl_i\right] \qquad (7A)$$

Here $\Omega = -\frac{\hat{Y}}{\hat{P}_y}$ is the aggregate price elasticity and $v_i = \frac{\hat{xd}_k}{\hat{xd}_i}$ is a conjectural elasticity of output.

I could use the following to further simplify (7A): $\frac{\hat{P}_y}{\hat{xd}_i} = \frac{\hat{P}_y}{\hat{Y}} * \frac{\hat{Y}}{\hat{xd}_i} = -\frac{1}{\Omega}\frac{\hat{Y}}{\hat{xd}_i}$

The expressions for XD and PS are easily transformed into hat notation: $\hat{XD} = \sum_k\left(\frac{\left(xd_k\right)^{-\left(\frac{1}{\sigma_d}\right)}}{\sum_j\left(xd_j\right)^{-\left(\frac{1}{\sigma_d}\right)}} * \hat{xd}_k\right)$ and therefore $\frac{\hat{XD}}{\hat{xd}_i} = \sum_k\left(sh_k * \frac{\hat{xd}_k}{\hat{xd}_i}\right) = \sum_{k\neq i}\left(sh_k * v_i + sh_i\right)$ by definition.

$$\hat{PS} = \frac{\delta * XD^{\frac{\sigma-1}{\sigma}}}{\delta * XD^{\frac{\sigma-1}{\sigma}} + (1-\delta) * XF^{\frac{\sigma-1}{\sigma}}} \hat{XD} + \frac{(1-\delta) * XF^{\frac{\sigma-1}{\sigma}}}{\delta * XD^{\frac{\sigma-1}{\sigma}} + (1-\delta) * XF^{\frac{\sigma-1}{\sigma}}} \hat{XF} = s_d * \hat{XD} + s_f * \hat{XF}$$ where

$$s_d = \frac{\delta * XD^{\frac{\sigma-1}{\sigma}}}{\delta * XD^{\frac{\sigma-1}{\sigma}} + (1-\delta) * XF^{\frac{\sigma-1}{\sigma}}}$$ share of the domestic sector.

Assuming that the domestic firms make the same conjectures about the behavior of the foreign firms and the symmetry in-between the domestic firms ($sh_k = \frac{1}{n_d}$), the following expressions could be derived:

$$\frac{\hat{XD}}{\hat{xd}_i} = v_i + (1-v_i)/n_d \quad (8A)$$

$$\frac{\hat{PS}}{\hat{xd}_i} = s_d \frac{\hat{XD}}{\hat{xd}_i} + (1-s_d)\frac{\hat{XF}}{\hat{xd}_i} = s_d * \left(\frac{1}{n_d} + v_i - \frac{v_i}{n_d}\right) + (1-s_d)\frac{v_i}{n_f} * n_f = v_i + (1-v_i) * S_i^d \quad (9A)$$

Here $S_i^d = s_d / n_d$ is the share of the domestic firm in the total producer services industry.
The production of the downstream industry could be written in hat notation:

$$\hat{Y} = \hat{VA} * SH_{VA} + PS * \hat{SH}_{PS} \quad (10A) \qquad SH_{PS} = \frac{PS^{\frac{\gamma-1}{\gamma}}}{VA^{\frac{\gamma-1}{\gamma}} + PS^{\frac{\gamma-1}{\gamma}}}$$

Then $\frac{\hat{Y}}{\hat{xd}_i} = \frac{\hat{PS}}{\hat{xd}_i} * SH_{PS} \quad (11A)$

If we plug (8A), (9A), and (11A) into (7A) we obtain the markup equation for the domestic firms:

$$\frac{1}{\varepsilon_i^d} = \left[\frac{1}{\gamma} - \frac{1}{\sigma} + SH_{PS}\left(\frac{1}{\Omega} - \frac{1}{\gamma}\right)\right]\left(v_i^d + (1-v_i^d)S_i^d\right) + \left(\frac{1}{\sigma} - \frac{1}{\sigma_d}\right)\left(v_i^d + (1-v_i^d)/n_d\right) +$$
$$+ \frac{1}{\sigma_d}\left(\frac{(v_i^d)^2 + 1}{1 + v_i^d(n_d - 1)}\right) \qquad (6)$$

The markup for the foreign firms could be obtained analogously:

$$\frac{1}{\varepsilon_i^f} = \left[\frac{1}{\gamma} - \frac{1}{\sigma} + SH_{PS}\left(\frac{1}{\Omega} - \frac{1}{\gamma}\right)\right]\left(v_i^f + (1-v_i^f)S_i^f\right) + \left(\frac{1}{\sigma} - \frac{1}{\sigma_f}\right)\left(v_i^f + (1-v_i^f)/n_f\right) +$$
$$+ \frac{1}{\sigma_f}\left(\frac{(v_i^f)^2 + 1}{1 + v_i^f(n_f - 1)}\right) \qquad (6^*)$$

Appendix C: Results of the sensitivity analysis

Table 2: Results of services trade liberalization in levels

Variables	Benchmark	Change in levels from the benchmark		
		No output tax	No lump sum tax	Free trade
Welfare	1.00	0.99	0.99	0.98
Perfectly competitive sector (Z)	1.00	1.08	1.09	1.14
Downstream industry (Y)	1.00	0.57	0.52	0.32
Producer services (PS)	1.00	0.57	0.52	0.32
Domestic services (XD)	1.00	0.48	0.42	0.20
Foreign services (XF)	1.00	0.86	0.84	0.72
Payments to the other factors of production	1.00	1.02	1.02	1.03
Payments to skilled labor	1.00	0.96	0.95	0.93
Net exports of Z	1.00	2.00	2.12	2.63
Net imports of Y	1.00	2.09	2.23	2.74
Markup of domestic service providers	0.38	0.40	0.41	0.44
Markup of foreign service providers	0.40	0.42	0.43	0.46
Price index for welfare	1.00	1.00	1.00	1.00
Price of the Z good	1.00	1.00	1.00	1.00
Price of the downstream industry (PY)	1.00	1.00	1.00	1.00
Price of services sector composite (PPS)	1.00	1.02	1.02	1.03
Price of the domestic services (PXD)	1.00	1.23	1.28	1.61
Price of the foreign services (PXF)	1.00	0.87	0.85	0.76
Number of domestic firms	10.00	6.47	5.99	3.93
Number of foreign firms	10.00	8.17	7.89	6.55
Share of the domestic sector	0.50	0.43	0.41	0.34
Share of the foreign sector	0.50	0.57	0.59	0.66
Output per domestic firm	0.10	0.07	0.07	0.05
Output per foreign firm	0.10	0.10	0.11	0.11

Table 3: Sensitivity analysis

Variables	scenario 1: level	scenario 1: percent	scenario 2: level	scenario 2: percent
Welfare	0.980	-2%	0.980	-2%
Perfectly competitive sector (Z)	1.138	14%	1.134	13%
Downstream industry (Y)	0.302	-70%	0.305	-70%
Producer services (PS)	0.297	-70%	0.299	-70%
Domestic services (XD)	0.181	-82%	0.189	-81%
Foreign services (XF)	0.694	-31%	0.687	-31%
Payments to the other factors of production	1.034	3%	1.029	3%
Payments to skilled labor	0.926	-7%	0.926	-7%
Net exports of Z	2.663	166%	0.657	166%
Net imports of Y	2.788	179%	0.813	181%
Markup of domestic service providers	0.447	19%	0.445	19%
Markup of foreign service providers	0.461	15%	0.461	15%
Price index for welfare	1.000	0%	0.998	0%
Price of the Z good	1.000	0%	0.997	0%
Price of the downstream industry (PY)	1.000	0%	1.003	0%
Price of services sector composite (PPS)	1.036	4%	1.044	4%
Price of the domestic services (PXD)	1.645	65%	1.621	62%
Price of the foreign services (PXF)	0.756	-24%	0.770	-23%
Number of domestic firms	3.753	-62%	3.846	-62%
Number of foreign firms	6.457	-35%	6.410	-36%
Share of the domestic sector	0.338	-32%	0.344	-31%
Share of the foreign sector	0.662	32%	0.656	31%
Output per domestic firm	0.048	-52%	0.049	-51%
Output per foreign firm	0.107	7%	0.107	7%

Here scenario 1 one represents the case where foreign firms are more skilled labor intensive than the local firms. The column denoted percent shows the percentage deviation from the benchmark. The scenario 2 presents the case where good Y is exported and good Z is imported. The free trade is a policy experiment in all the cases

Table 4: Sensitivity analysis

Variables	scenario 3: level	scenario 3: percent	scenario 4: level	scenario 4: percent
Welfare	0.986	-1%	1.078	8%
Perfectly competitive sector (Z)	1.117	12%	0.114	-89%
Downstream industry (Y)	0.422	-58%	6.152	515%
Producer services (PS)	0.416	-58%	6.866	587%
Domestic services (XD)	0.304	-70%	3.974	297%
Foreign services (XF)	1.162	16%	7.092	609%
Payments to the other factors of production	1.028	3%	0.841	-16%
Payments to skilled labor	0.938	-6%	1.515	52%
Net exports of Z	2.384	138%	-9.221	-1022%
Net imports of Y	2.491	149%	-12.472	-1347%
Markup of domestic service providers	0.433	15%	0.334	-11%
Markup of foreign service providers	0.427	7%	0.145	-28%
Price index for welfare	1.000	0%	1.002	0%
Price of the Z good	1.000	0%	1.003	0%
Price of the downstream industry (PY)	1.000	0%	0.997	0%
Price of services sector composite (PPS)	1.030	3%	0.800	-20%
Price of the domestic services (PXD)	1.379	38%	0.876	-12%
Price of the foreign services (PXF)	0.647	-35%	0.736	-26%
Number of domestic firms	5.058	-49%	22.989	130%
Number of foreign firms	8.362	-16%	29.013	190%
Share of the domestic sector	0.544	-22%	0.428	-14%
Share of the foreign sector	0.456	52%	0.572	14%
Output per domestic firm	0.060	-40%	0.173	73%
Output per foreign firm	0.139	39%	0.244	144%

Here scenario 3 presents the case where share of the domestic industry is higher than the share of the foreign industry in the benchmark. The scenario 4 represents the case where the fixed costs and correspondingly the markup of the foreign firms are reduced. The free trade is a policy experiment in all the cases